XYLEM®
WHERE IDEAS FLOW

SERVICE PARTS
CYLINDER™
TALL LAVATORY FAUCET
CYLTL10BN
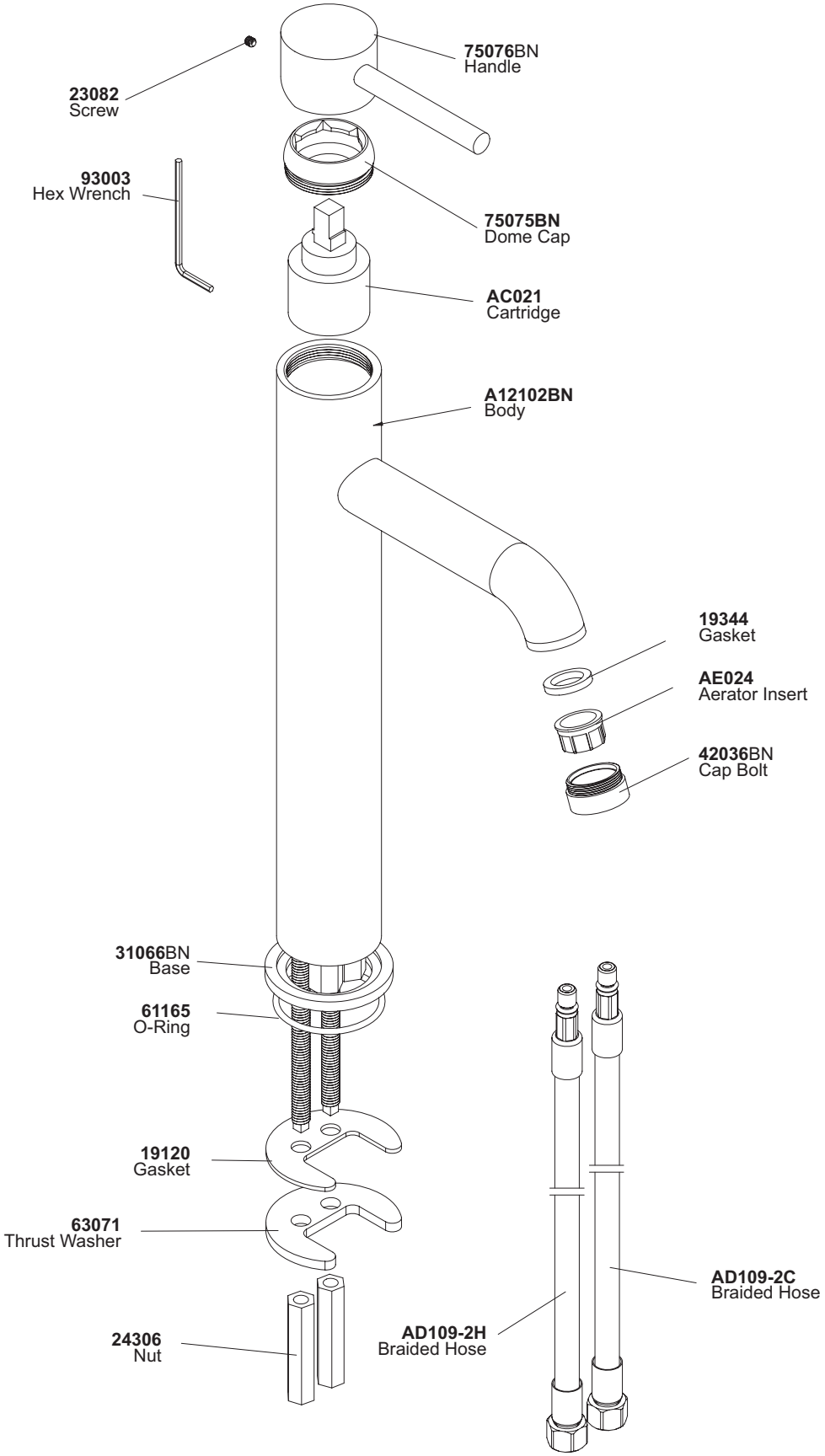
Certified to comply with ANSI/NSF61/9